Elongated Fittings

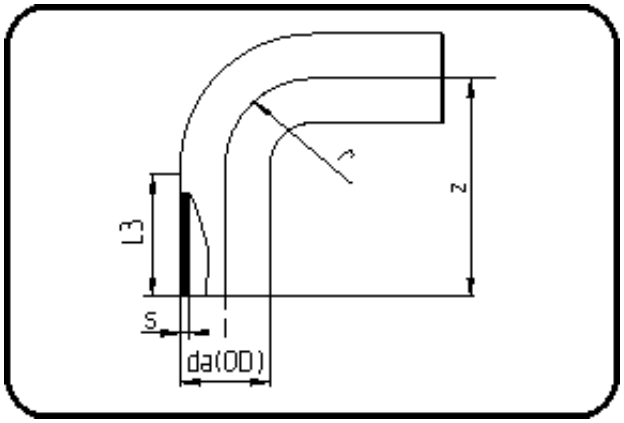

Code: 068

- **MULTI-Bend 90°**
- long spigot
- W/P-TW
- injection moulded
- **Butt + E-fusion-welding**
- **PE 100-RC black**

Dimension	Code	Detail	Weight
180	70.068.0180.11	180X16,4 SDR11 PN16	4.57

	Unit	Nominale	Tol+	Tol-
da(OD)	mm	180.00	1.10	0.00
L3	mm	109.00	6.00	6.00
r	mm	180.00	-	-
s	mm	16.40	1.80	0.00
z	mm	285.00	7.50	7.50