# Elongated Fittings

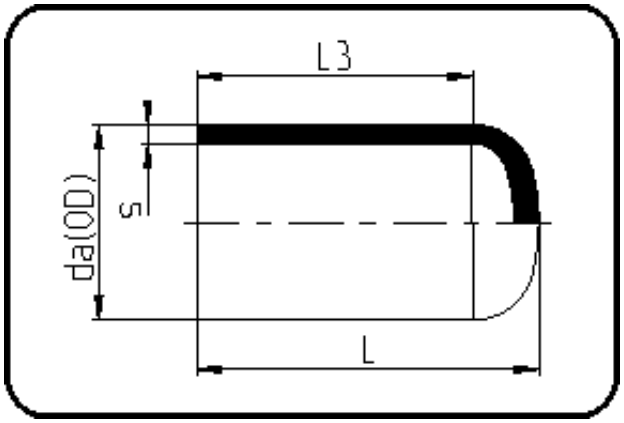


Code: 064

- **End Cap**
- long spigot
- W/P-TW
- injection moulded
- **Butt + E-fusion-welding**
- **PE 100-RC black**

| Dimension | Code | Detail | Weight |
|---|---|---|---|
| 110 | 70.064.0110.11 | 110X10,0 SDR11 PN16 | 0.47 |

| | Unit | Nominale | Tol+ | Tol- |
|---|---|---|---|---|
| da(OD) | mm | 110.00 | 0.70 | 0.00 |
| L | mm | 133.00 | 3.00 | 3.00 |
| L3 | mm | 95.00 | 1.50 | 1.50 |
| s | mm | 10.00 | 1.10 | 0.00 |