Elongated Fittings

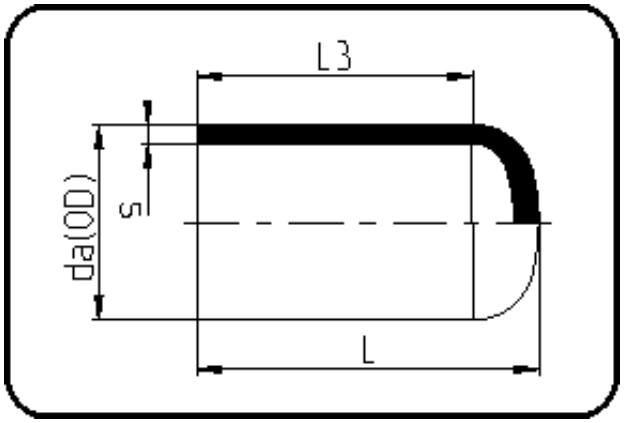

Code: 064

- **End Cap**
- long spigot
- W/P-TW
- injection moulded
- **Butt + E-fusion-welding**
- **PE 100-RC black**

Dimension	Code	Detail	Weight
125	70.064.0125.11	125X11,4 SDR11 PN16	0.59

	Unit	Nominale	Tol+	Tol-
da(OD)	mm	125.00	0.80	0.00
L	mm	132.00	4.50	4.50
L3	mm	100.00	2.25	2.25
s	mm	11.40	1.30	0.00