Electro Fusion Fittings

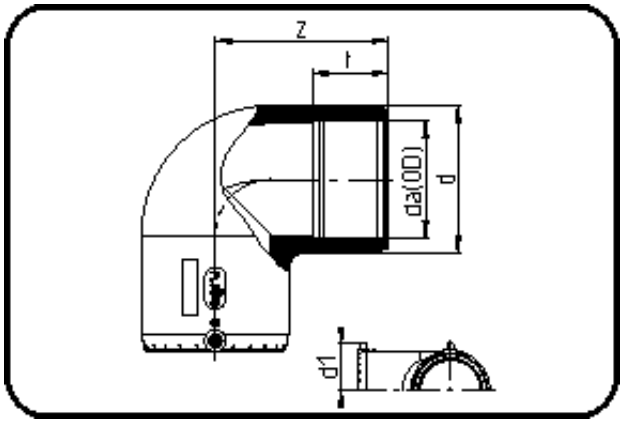

Code: 171

- **E-Elbow 90°**
- MOP water 16bar/gas 10bar
- W/P-TW
- injection moulded
- **Electro-fusion**
- **PE 100-RC black**

For AGRU E-fittings we recommend AGRU E-welding machines with an SCP system.

Dimension	Code	Detail	Weight
20	70.171.0020.11	20 SDR 11-7,4	0.05

	Unit	Nominale	Tol+	Tol-
da(OD)	mm	20.00	-	-
d	mm	30.00	0.75	0.75
d1	mm	37.00	1.50	1.50
t	mm	36.50	1.50	1.50
z	mm	58.00	2.25	2.25