Elongated Fittings

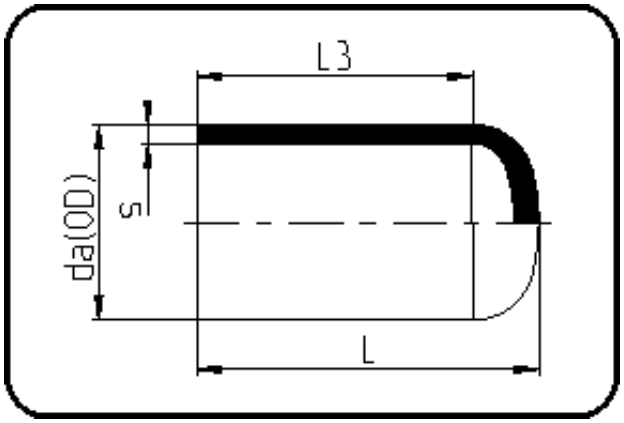

Code: 064

- **End Cap**
- long spigot
- W/P-TW
- injection moulded
- **Butt + E-fusion-welding**
- **PE 100-RC black**

Dimension	Code	Detail	Weight
250	70.064.0250.11	250X22,7 SDR11 PN16	3.85

	Unit	Nominale	Tol+	Tol-
da(OD)	mm	250.00	1.50	0.00
L	mm	223.00	6.00	6.00
L3	mm	160.00	3.00	3.00
s	mm	22.70	2.40	0.00