# Elongated Fittings

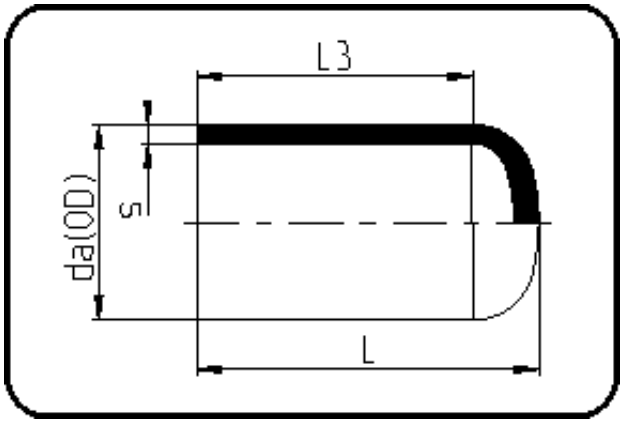


Code: 064

- **End Cap**
- long spigot
- W/P-TW
- injection moulded
- **Butt + E-fusion-welding**
- **PE 100-RC black**

| Dimension | Code | Detail | Weight |
|---|---|---|---|
| 90 | 70.064.0090.17 | 90X5,4 SDR17 PN10 | 0.17 |

| | Unit | Nominale | Tol+ | Tol- |
|---|---|---|---|---|
| da(OD) | mm | 90.00 | 0.60 | 0.00 |
| L | mm | 107.00 | 1.50 | 1.50 |
| L3 | mm | 82.00 | 1.50 | 1.50 |
| s | mm | 5.40 | 0.70 | 0.00 |