Fittings with short Spigot

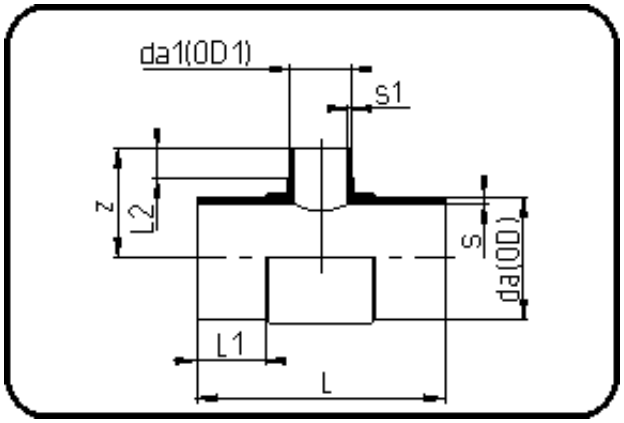

Code: 016

- **Tee reduced**
- short spigot
- injection moulded
- **Butt-welding**
- **PE 100-RC black**

Dimension	Code	Detail	Weight
125/63	70.016.1263.11	125/63 SDR11 ISO S-5	1.42

	Unit	Nominale	Tol+	Tol-
da(OD)	mm	125.00	1.20	0.00
L	mm	275.00	4.50	4.50
L1	mm	75.00	3.75	3.75
L2	mm	31.00	1.50	1.50
s	mm	11.40	1.30	0.00
s1	mm	5.80	0.70	0.00
da1(OD1)	mm	63.00	0.60	0.00
z	mm	112.00	3.00	3.00