Fittings with short Spigot

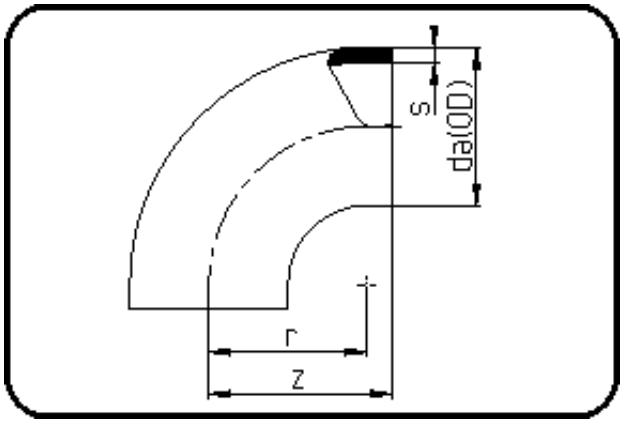

Code: 001

- **Bend 90°**
- short spigot
- injection moulded
- **Butt-welding**
- **PPR grey**

Dimension	Code	Detail	Weight
160	11.001.0160.11	160X14,6 SDR11 ISO S-5	1.84

	Unit	Nominale	Tol+	Tol-
da(OD)	mm	160.00	1.50	0.00
r	mm	155.00	-	-
s	mm	14.60	1.60	0.00
z	mm	180.00	4.50	4.50