Fittings with short Spigot

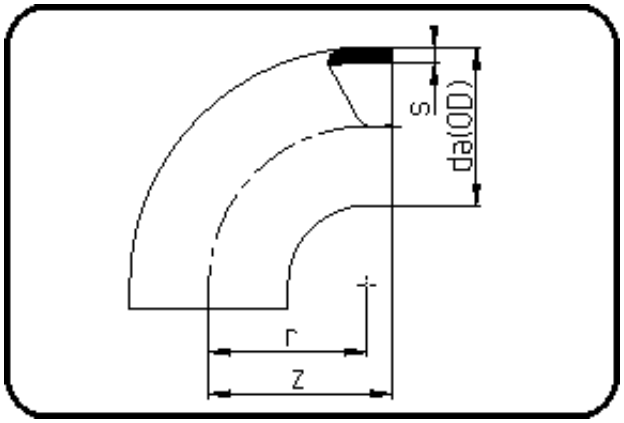

Code: 001

- **Bend 90°**
- short spigot
- injection moulded
- **Butt-welding**
- **PE 100-RC black**

Dimension	Code	Detail	Weight
63	70.001.0063.11	63X5,8 SDR11 ISO S-5	0.11

	Unit	Nominale	Tol+	Tol-
da(OD)	mm	63.00	0.60	0.00
r	mm	63.00	-	-
s	mm	5.80	0.70	0.00
z	mm	70.00	3.00	3.00