Elongated Fittings

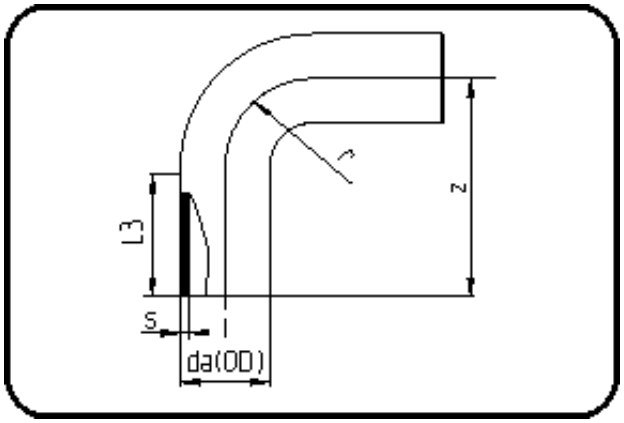

Code: 068

- **MULTI-Bend 90°**
- long spigot
- W/P-TW
- injection moulded
- **Butt + E-fusion-welding**
- **PE 100-RC black**

Dimension	Code	Detail	Weight
140	70.068.0140.11	140X12,7 SDR11 PN16	2.35

	Unit	Nominale	Tol+	Tol-
da(OD)	mm	140.00	0.90	0.00
L3	mm	99.00	4.50	4.50
r	mm	140.00	-	-
s	mm	12.70	1.40	0.00
z	mm	241.00	6.00	6.00