Fittings with short Spigot

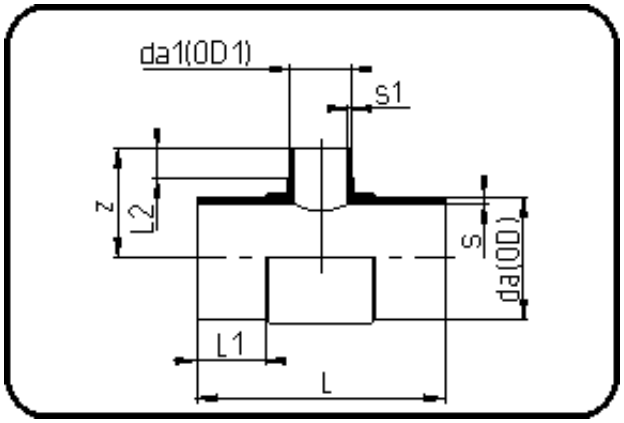

Code: 016

- **Tee reduced**
- short spigot
- injection moulded
- **Butt-welding**
- **PE 100-RC black**

Dimension	Code	Detail	Weight
90/50	70.016.9050.11	90/50 SDR11 ISO S-5	0.59

	Unit	Nominale	Tol+	Tol-
da(OD)	mm	90.00	0.90	0.00
L	mm	210.00	4.50	4.50
L1	mm	57.00	2.25	2.25
L2	mm	27.00	1.50	1.50
s	mm	8.20	1.00	0.00
s1	mm	4.60	0.60	0.00
da1(OD1)	mm	50.00	0.50	0.00
z	mm	90.00	3.00	3.00