# Fittings with short Spigot

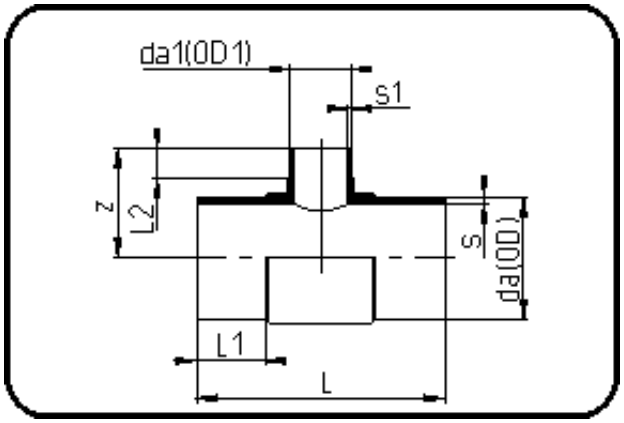


Code: 016

- **Tee reduced**
- short spigot
- injection moulded
- **Butt-welding**
- **PE 100-RC black**

| Dimension | Code | Detail | Weight |
|---|---|---|---|
| 160/125 | 70.016.1612.17 | 160/125 SDR17 ISO S-8 | 2.22 |

| | Unit | Nominale | Tol+ | Tol- |
|---|---|---|---|---|
| da(OD) | mm | 160.00 | 1.50 | 0.00 |
| L | mm | 325.00 | 4.50 | 4.50 |
| L1 | mm | 62.00 | 3.75 | 3.75 |
| L2 | mm | 50.00 | 3.75 | 3.75 |
| s | mm | 9.50 | 1.10 | 0.00 |
| s1 | mm | 7.40 | 0.90 | 0.00 |
| da1(OD1) | mm | 125.00 | 1.20 | 0.00 |
| z | mm | 150.00 | 3.00 | 3.00 |