Elongated Fittings

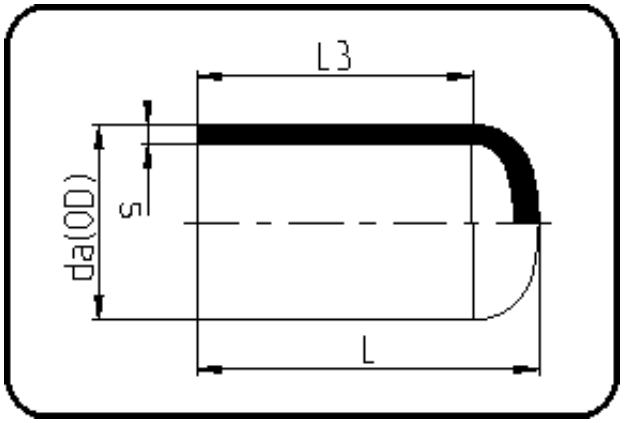

Code: 064

- **End Cap**
- long spigot
- W/P-TW
- injection moulded
- **Butt + E-fusion-welding**
- **PE 100-RC black**

Dimension	Code	Detail	Weight
315	70.064.0315.17	315X18,7 SDR17 PN10	4.93

	Unit	Nominale	Tol+	Tol-
da(OD)	mm	315.00	1.90	0.00
L	mm	262.00	3.00	3.00
L3	mm	167.00	3.00	3.00
s	mm	18.70	2.00	0.00